START & STOP SYSTEM

The Start&Stop device automatically stops the engine each time the vehicle is stationary and starts it again when the driver wants to move off.
This improves the efficiency of the vehicle by reducing fuel consumption, the emission of harmful gases and noise pollution.

COMPONENTS

The Start&Stop device is essentially based on a starting system (battery and starter) which can restart the engine quickly and relatively quietly; it can withstand a number of start-ups much higher than traditional systems.
The system contains other hardware and software components (special sensors and control strategies) that manage the stopping and restarting operations without requiring the driver to change their driving style, ensuring the safety, driveability and energy balance of the vehicle with a minimum impact on climate comfort and the accessibility of the on board services.
In safety conditions, the power unit is switched on and off by appropriate manoeuvres of the accelerator, brake and clutch pedals and the gear lever, which are provided with special sensors.
To guarantee driveability, starting responsiveness (when warm), reliability and safety a more powerful and robust starting system has been adopted.
To prevent voltage drop during the first start-up stages, with a consequent loss of "infotainment" service functionality (radio, navigator, Hi-Fi audio system), a special voltage stabiliser is used to supply the loads sensitive to voltage drops.
The engine stopping and restarting activation and control strategies are managed by two control units:
- Engine Management Node (NCM);
- Body Computer (BC).
The controls, signals and information necessary to activate the Start&Stop arrive at or come from these two elements, through direct connections or the CAN.
The NCM and BC communicate constantly to establish whether, moment by moment, there are Start&Stop system "integrity" conditions, whether the system is enabled or whether, instead, it is temporarily or permanently disabled.
The NCM is the "master" control unit which controls the stopping and the restarting of the engine on the basis of the information acquired on the status of the vehicle and of the relevant Start&Stop system components.
The BC acquires part of the information concerning the status of all the vehicle systems that interact with the Start&Stop system and are not directly monitored by the NCM. It communicates enablement or inhibition (temporary or permanent) to the NCM to switch off the engine or request that the power unit is restarted. In hazardous conditions that compromise safety it forces the NCM to "irreversibly" switch off the power unit; the engine can only then be restarted using the key.
The main system components are illustrated in the diagram.

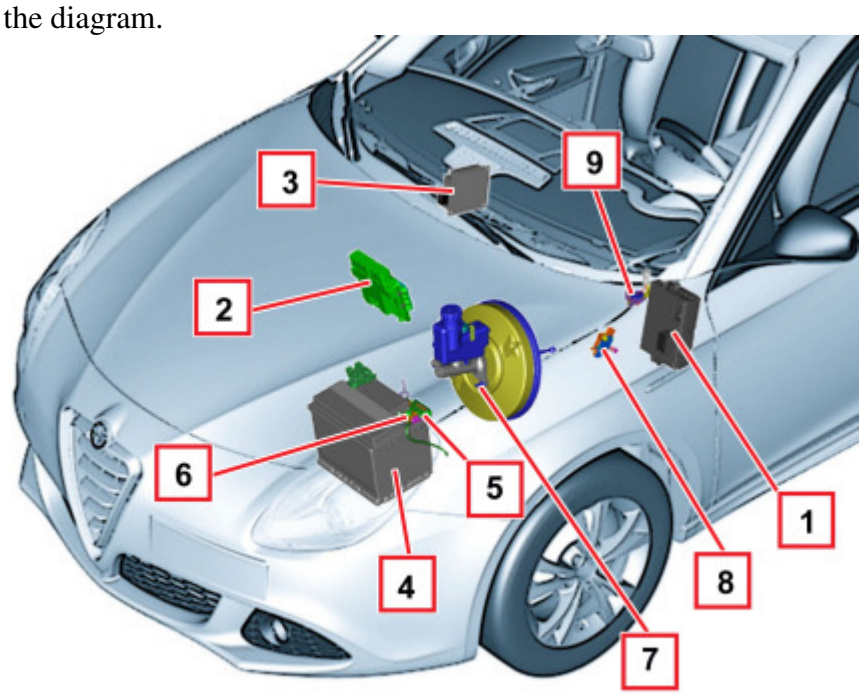

1. Body Computer
2. Engine Management Node
3. Voltage stabiliser
4. Battery
5. Battery charge status sensor
6. Negative battery terminal
7. Servo brake pressure sensor
8. Clutch pedal sensor (mechanical gearbox)
9. Gearbox neutral position sensor (mechanical gearbox)

Starter

The starter motor used is more powerful and resistant thanks to the adoption of special improvements.

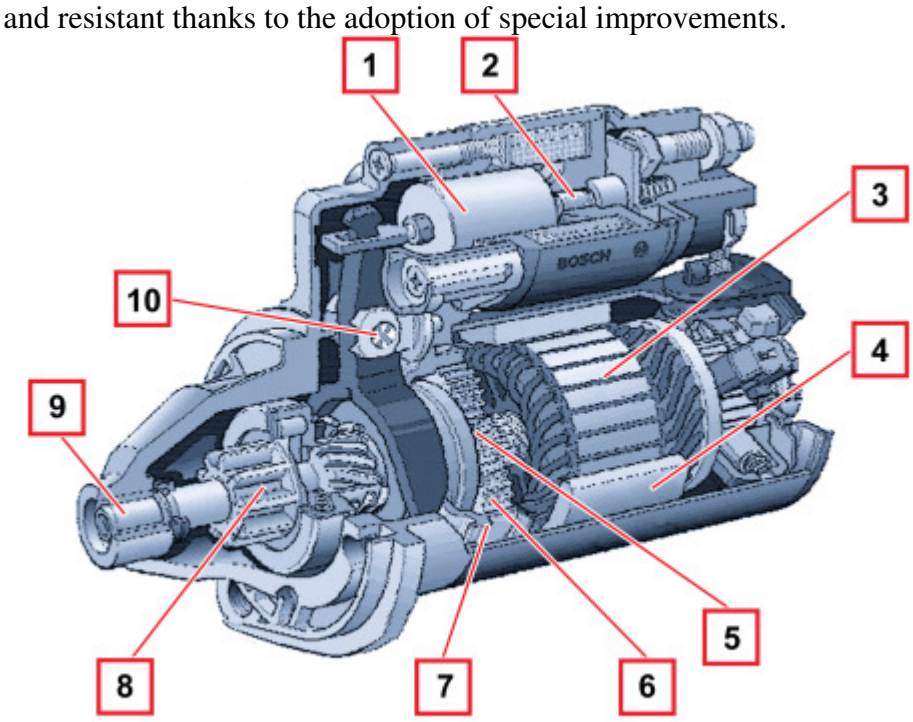

1. Enamel lined engagement relay switch
2. Reinforced springs
3. Larger electrical motor
4. Permanent magnets with increased flux and improved resistance to demagnetising
5. Gear reducer with lower reduction ratio
6. Gears with roller bearing
7. Gear reducer with rubber dampers
8. Pinion with a high number of teeth
9. End bush with roller bearing
10. Reinforced lever

Alternator

The alternator has also been increased, with a higher current supply capacity.

Battery

The battery of a car with Start&Stop is subjected to greater electrical stress due to the increased number of start-ups as well as the current supply when the vehicle is stopped (when the alternator is off). To ensure high reliability the battery capacity has been increased and the "Heavy Duty" type suitable for increased electrical stress has been adopted.

⚠ Replacing a heavy duty battery with a regular battery may lead, in addition to a reduced availability of the Start&Stop system, to the rapid wear of the battery with a greatly reduced life.

Voltage stabilizer

The voltage stabiliser maintains a constant voltage for devices sensitive to voltage drops: in particular it is used to supply loads such as the "infotainment" services (radio, navigator, Hi-Fi audio system). The voltage stabiliser ensures that the supply voltage during automatic starting is kept at limits where no power supply problems will occur.
The voltage stabilization function is not, on the other hand, guaranteed during starting using the key.
The BCM receives a signal from the voltage stabilizer which provides information relating to a possible fault in the component. A possible malfunction in the voltage stabilizer may lead to the radioreceiver cutting out or being reset during a restarting stage.
The voltage stabiliser is fitted under the dashboard, on the passenger side, next to the glove compartment:

VOLTAGE STABILIZER PIN-OUT

PIN	FUNCTION
1	+30 power supply (OUT)
3	Voltage stabilizer fault
4	+50 from starting relay
6	+ 15 supply
8	+30 power supply (in)
9	+30 power supply (OUT)
16	Chassis earth

Battery status sensor

In addition to modifications to the battery, in order to integrate it with the Start&Stop strategies, a battery status sensor has been introduced (IBS - intelligent battery sensor) that monitors the battery status and notifies the vehicle (in particular the Body Computer) to allow the optimum management of the battery within the framework of the Start&Stop strategies.
The sensor is fitted on the battery negative pole.
The negative pole is replaced by a quick-release negative terminal directly connected to the engine/gearbox earth point.

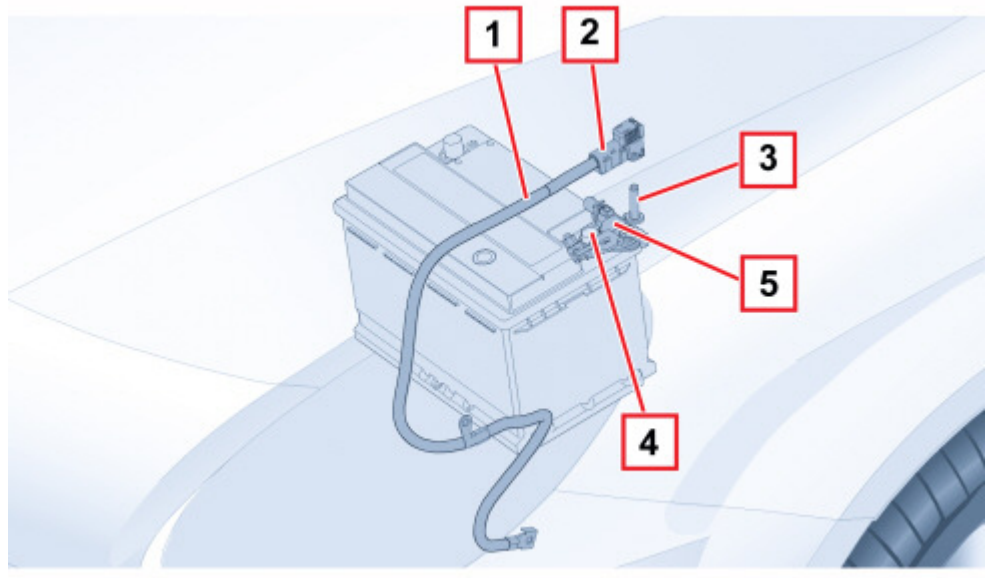

1. Engine/gearbox earth lead
2. Quick-release negative terminal
3. Connection between terminal and battery status sensor
4. Negative battery pole
5. Battery status sensor

With this solution there is no connection on the negative battery pole. In this way all current consumption is detected by the IBS sensor: otherwise the battery status could not be evaluated correctly.

Sensor operation

The IBS takes certain measures, using its internal sensors:
- Battery voltage (V)
- Battery current (A)
- Battery temperature (°C)
The IBS internally processes these values and calculates the parameters which express the battery status:
- SOC = State Of Charge: percentage of the battery's residual charge as compared to its nominal capacity. In practice, it indicates the battery charge.
- SOH = State Of Health: indicates the ageing of the battery. It indicates the actual battery capacity, as a %, in relation to the rated capacity. The reading is due to the fact that, during operation, the battery is subject to irreversible processes that reduce its capacity to be recharged and supply energy (ageing of the battery).
- SOF = State Of Function: the minimum voltage peak that will be reached during the next engine start-up, in volts
These three parameters identify the start-up capacity of the battery:
- in the case of a low SOC or SOH the battery may not be able to restart the engine
- in the event of a low SOF the battery voltage during start-up may be too low for the regular operation of the vehicle's electronic control units.
The following picture shows the IBS sensor connector, which is also connected to the car's electric system nodes with a LIN communication line.

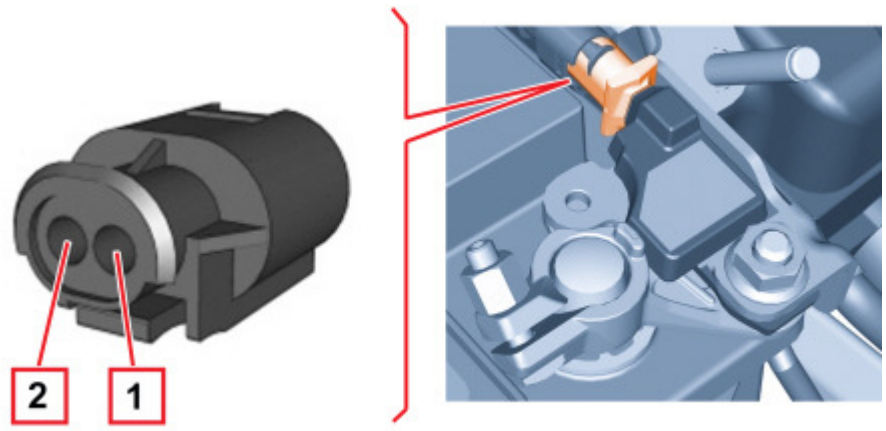

SENSOR PIN-OUT

PIN	FUNCTION
1	LIN communication line
2	Voltage measurement and power supply

Jump starting

When jump starting, never connect the negative lead (-) of the auxiliary battery to the negative pole of the car battery, but rather to an engine/gearbox earth point.
Fasten the positive cable (+) to the stud (1) and not to the stud (2) to which a fuse is connected.

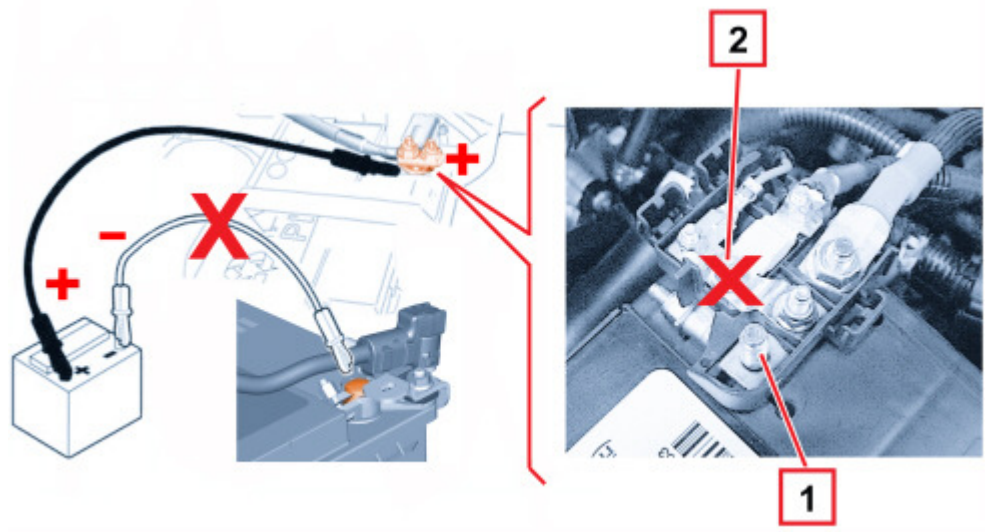

Battery recharging

To charge the battery, proceed as follows:
- disconnect the terminal **A** (pressing the red button) from the sensor monitoring the battery conditions, on the negative pole of the same battery;
- connect the positive cable of the charger to the positive pole of the battery and the negative cable to the **B** pole;
WARNING: the positive cable must be fastened on the stud (**1**) and **NOT** to the stud (**2**) to which a fuse is connected.
- turn on the battery charger. After the recharge, turn the charger off before disconnecting it from the battery;
- after disconnecting the battery charger, reconnect the quick-release negative terminal **A**;

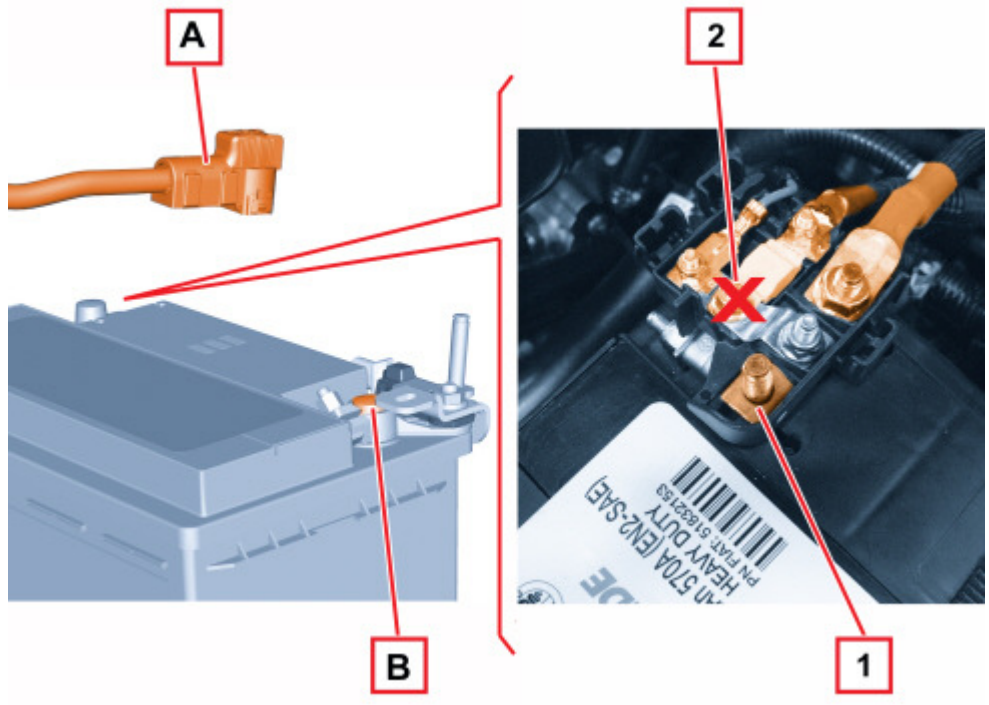

Ibs sensor recalibration

When the IBS receives a power supply for the first time or receives a power supply after a break in supply, it enters a so-called "recalibration" stage in which the IBS must recognise the type of battery, its specifications and its status. During this stage the tolerances for the status variables (SOC, SOF, SOH) are higher than in standard operating conditions. The IBS exits from the calibration stage when the SOC and SOF evaluations are within the tolerances: this occurs after a rest stage (engine off) of at least 4 hours followed by a start-up.

Vacuum sensor on brake servo

The NCM acquires information about the brake servo circuit vacuum by means of a vacuum sensor, switch on/off type.

Neutral sensor (for versions with manual gearbox only)

The NCM acquires information on the engagement of neutral from a dedicated sensor fitted on the gearbox.

Clutch sensor (for versions with manual gearbox)

The NCM receives a value from the rotary sensor associated with the clutch pedal which can be:
- HIGH (pedal not pressed),
- MIDDLE (pedal partly pressed),
- LOW (pedal pressed)

OPERATION

- version with manual gearbox

The system operates every time the car is started.
Engine stopping mode
With the vehicle almost at a standstill (speed lower than 3 km/h for more than 0.5 seconds and accelerator pedal released), the engine stops if the following manoeuvres are carried out:
- gearbox in neutral
- clutch pedal released.

The engine can only be stopped automatically after a speed of about 10 km/h is reached, to prevent the engine from being repeatedly stopped when driving at walking pace.

The engine stopping is signalled by the dedicated warning light on the instrument panel.

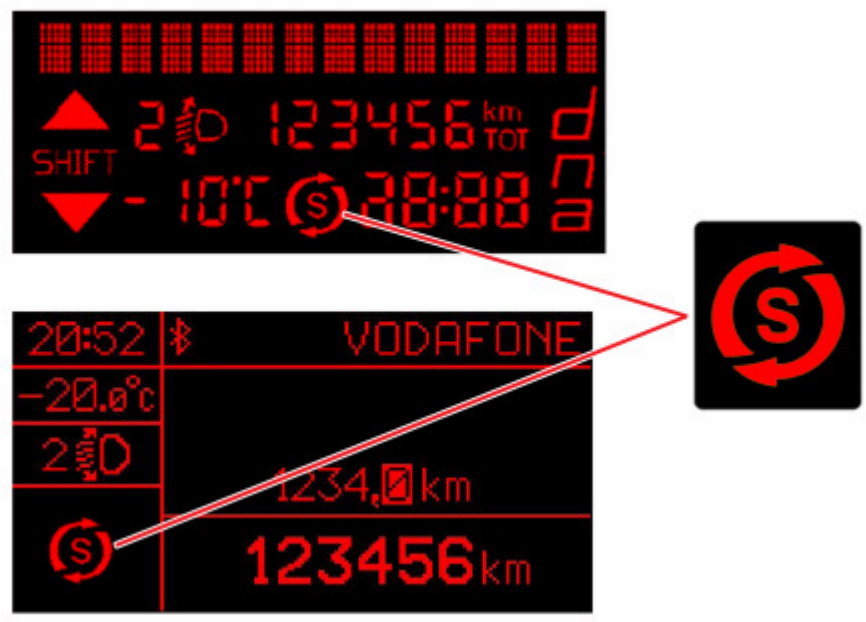

Engine restarting mode
The engine is automatically restarted when the clutch is depressed.
When the gearbox is not in neutral (caused by the forced engagement of a gear whilst the engine is stopped), the clutch should be fully depressed, whilst if the gearbox is in neutral restarting takes place with the clutch not yet fully depressed in order to facilitate quick starting. In practice driving behaviour does not change: once the driver has decided to set off, they will press the clutch to re-engage gear: at this point the engine will already have been restarted and the vehicle will be ready to set off again.

- version with tct transmission

The system operates every time the car is started.
Engine stopping mode
With the vehicle almost at a standstill (speed lower than 3 km/h for more than 0.5 seconds and accelerator pedal released), the engine stops if the following manoeuvres are carried out:
- gear lever is in a position other than R
- brake pedal pressed.

The engine can only be stopped automatically after a speed of about 10 km/h is reached, to prevent the engine from being repeatedly stopped when driving at walking pace.

The engine stopping is signalled by the dedicated warning light on the instrument panel.

In the event of stops uphill, the engine switching off is disabled to activate the "HILL HOLDER" function, that works only with running engine.

Engine restarting mode
The engine is restarted automatically when:
- The brake pedal is released and the lever is not in N or P;
- the lever is shifted to an unstable position, +, - or R;
– the lever is moved from D to the left in sequential mode or vice versa;
- the levers + or – on the steering wheel are operated;
The display shows the passage:
- D, N, D: if the engine was switched off with lever in position D (automatic mode)
- 1, N, 1: if the engine was switched off with lever in sequential mode.

Manual activation and deactivation

The device can be manually activated/deactivated using the button between the controls on the side of the dashboard.
When the system is deactivated, the LED on the button and the relevant warning light on the instrument panel switch on.

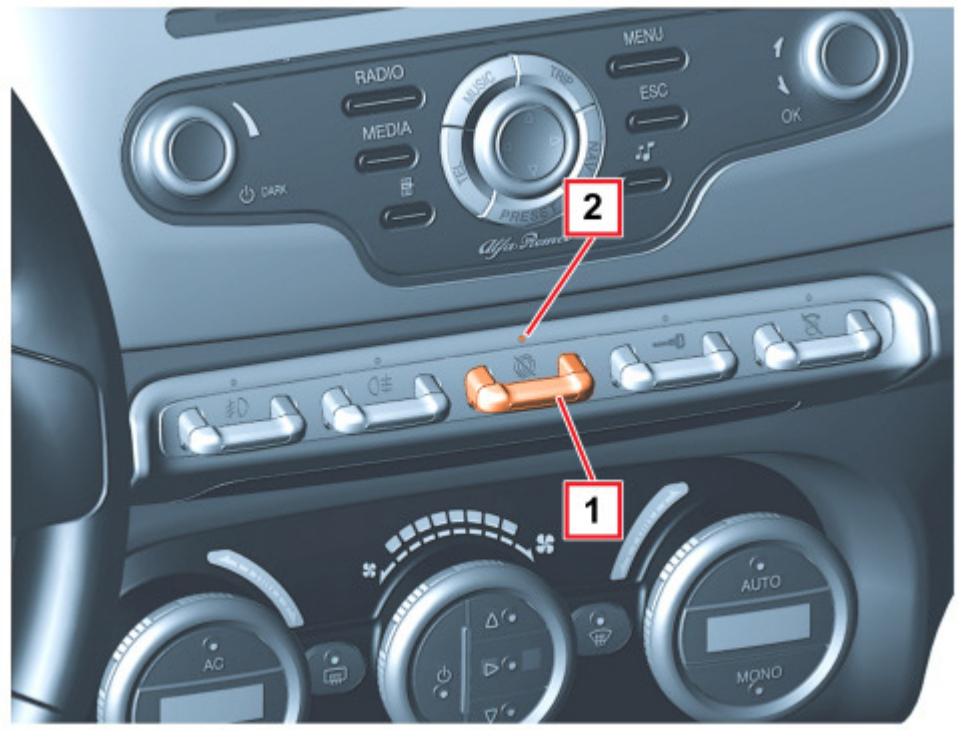

1. Start&Stop deactivation push button
2. Start&Stop deactivation LED

DISPLAY IN INSTRUMENT PANEL
The instrument panel display shows additional information (messages) concerning the system deactivation or activation, according to the following logic:
The S&S icon **(a)** only switches on when the engine switches off after one of the S&S strategies is actuated. When the engine is key-started or the S&S is disabled due to a fault or a safety condition and the engine is off, the dedicated icon remains off.
The fault warning light **(b)** switches on if one of the expected fault conditions occurs. In this case, the warning light on the "S&S disabled" graphic also switches on.

(a) (b)

The messages on the display inform the driver about the different situations concerning the Start&Stop system operation.
The possible messages are:
- "Start&Stop disabled" or "Start&Stop enabled" are displayed when the corresponding button is pressed. The display is temporary and occurs with the engine switched on or off.
- "Start&Stop not available" is displayed in the event of temporary unavailability or permanent fault. The display is temporary and can occur with engine switched on or off.
- "Press clutch pedal" is displayed when, with the engine off and gear engaged, the engine must be restarted. The display is temporary and occurs only with the engine off.

BUZZER
In addition the buzzer is activated in the following two cases:
- with the engine off and gear engaged, an automatic engine restart is necessary for safety reasons. In this case also the acoustic signal is activated to reinforce the text message on the display which requests that the driver presses the clutch.
- for safety reasons, if the engine is switched off a key-off / key-on operation is necessary to restart it. In this case also the acoustic signal is activated to reinforce the text message on the display which indicates that Start&Stop is not available.

CONTROL LOGIC

For comfort, emission control and safety reasons, under certain circumstances the system "locks" the normal operation of the device.

Engine stopping failure conditions

When the device is active the engine does not stop if:
- engine still cold (signal from the engine temperature sensor lower than about 40°C);
- battery not sufficiently charged (state of charge lower than 75%) or battery charge sensor malfunction detected;
- reduced braking system vacuum, detected by the dedicated sensor, e.g. if the brake pedal is pressed repeatedly;
- particulate filter regeneration in progress (diesel engines with DPF only);
- voltage stabilizer malfunction
- heated rear window activated (assuming that the driver wishes to demist the windows, it is appropriate for the engine to remain running to have hot air and/or air conditioning available)
- windscreen wiper operating at maximum speed for more than 4 seconds (in this condition it is assumed that the weather conditions are adverse and so it is preferable to have maximum driving comfort);
- driver's door not shut;
- driver's seat belt not fastened;
- reverse gear engaged (in this way the driveability during parking manoeuvres is not compromised);
- with automatic climate control system, if an adequate level of thermal comfort has not been reached (difference between the climate control temperature set by the customer and the temperature inside the passenger compartment greater than 4°C) or MAX-DEF activation;
- malfunction of some sensors or systems
- during the first period of use, to initialise the system.
- particularly cold external temperatures, if the corresponding indication is provided.

In the above cases there is an information message in the display and, where provided, the warning light will flash on the instrument panel.

Restart conditions (automatic)

The engine is forced to restart automatically, without any action by the driver, under particular conditions, such as:
- reduced braking system vacuum: if the vacuum sensor provides a very low value, indicating that there may be a deterioration in the braking capacity. This prevents undesired movement of the car with the engine off on a gradient due to possible brake servo failure.
- car running: if the car speed exceeds 5 km/h. This avoids dangerous situations due to failure of the engine brake on gradients.
- vehicle stopped for too long: the engine is restarted if it has been stopped by the Stop&Start system for more than 160 seconds, provided that the gearshifting lever is still in neutral.
- reverse engaged: this measure is adopted in order not to compromise driveability during parking manoeuvres.
- engine cold: if the signal from the engine temperature sensor is lower than about 30°C
- catalytic converter temperature too low
- Handbrake applied with the car moving: if the handbrake is applied whilst the vehicle is moving with the engine stopped at a speed higher than 3 km/h. This is a further safety measure to prevent dangerous situations due to engine brake failure on a gradient.
- particulate filter regeneration in progress (diesel engines with DPF only);

- battery not sufficiently charged (state of charge lower than 70%)
- battery state of charge sensor fault
- particularly cold external temperatures, if the corresponding indication is provided
- with automatic climate control system, if the difference between the climate control temperature set by the customer and the temperature inside the passenger compartment is greater than 7°C, or MAX-DEF activation.
- windscreen wiper operating at maximum speed for more than 4 seconds.

With a gear engaged, the engine can be automatically restarted only by fully depressing the clutch pedal. The driver is asked to perform this operation through a message in the instrument panel and by the warning light on the instrument panel flashing.
If the clutch is not pressed, when three minutes have elapsed since the engine was stopped, the engine can only be restarted using the key.

In cases of undesired engine stops, due for example to the clutch pedal being released abruptly with a gear engaged, if the Start&Stop system is activated, the engine can be restarted by fully depressing the clutch pedal or by placing the gearshifting lever in neutral.

Safety functions

In engine cut-out conditions through the Start&Stop system, if the driver unfastens his/her seat belt and opens the driver's door or the passenger door, the engine can be restarted only by using the key.
The driver is notified of this condition both by a buzzer and through an information message in the display and by the warning light on the instrument panel flashing.
Other conditions "blocking" the device are:
- many unsuccessful automatic start-up attempts, if the maximum number (5) of failed engine automatic start-up attempts is exceeded; this threshold is set to avoid damage to the starter;
- malfunction of some sensors or systems;
- the driver has been prompted to perform an action but did not perform it in time (175 second timeout from the engine stopping); for example if an automatic engine restart attempt is unsuccessful as a result of a failure to press the clutch or because the gearbox is not in neutral and the driver is then requested to allow automatic restart by pressing the clutch or engaging neutral, the engine can only be restarted using the key after 175 seconds have elapsed from the engine stopping;
- engine bonnet open (only where provided).

"energy saving" function

If, after the engine has been automatically restarted, the driver does not take any action for a period of about three minutes, the Start&Stop system will definitively stop the engine to avoid fuel consumption. The engine can only be started using the key in such cases.
In any case, it is possible to keep the engine running by deactivating the Start&Stop system.

Irregular operation

In the case of malfunctions the Start&Stop system is disabled.
The driver is informed of the problem by the general failure warning light, where provided, and the displaying of the information message and the system failure icon on the control panel.

Starting system wiring diagram

The vehicle starting scheme manages both the start-ups managed by the user (using the key) and the automatic engine restarting due to the Stop&Start function.
The following figure shows the simplified wiring diagram for the starting system:

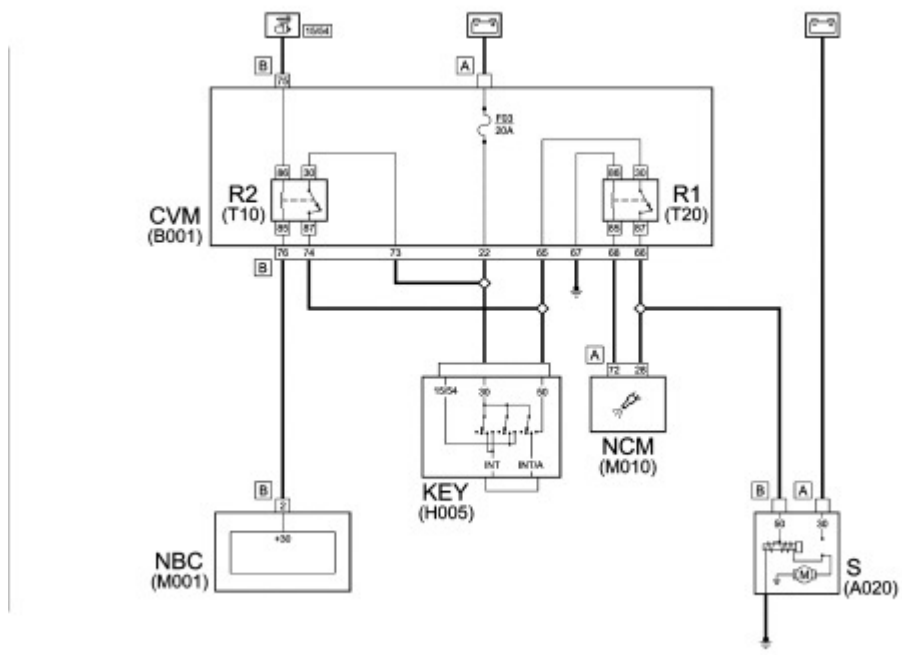

- **S** - Starter, with control (50) and power (30) connections
- **F03** - Starting circuit protective fuse
- **NCM** - Engine Management Node
- **NBC** - Body Computer
- **CVM** - Engine Compartment Junction Unit
- Starting relay **R1** (T20 of CVM control unit)
- Control relay **R2** (T17 of CVM control unit)
- **KEY** - Ignition switch

There are two types of starting:

- Key start-up: is directly controlled by the driver through the ignition key.
- Automatic start-up: is managed by the Start&Stop function in order to restart the engine after the vehicle has been stopped.

Key starting

Key start-up is controlled by the user by bringing the key to the starting position: under these circumstances starting is managed according to the following logic:
- In key OFF conditions both starting relays are not supplied and therefore open
- When the key is turned to AVV position (+50), the NCM control unit closes the relay R1 and controls the starter supply.
When the key is released in the ON position, the NCM control unit opens the relay R1 and performs a diagnosis on both relays; depending on the outcome of this diagnosis, the following conditions may occur:
a) Both relays operate normally: the Body Computer (signal from pin 49 of connector D) closes the relay R2 and Start&Stop functionality is enabled.
b) The relay R1 is "stuck": R2 is kept open and the Start&Stop disabled.
c) The relay R2 is "stuck": R1 is kept open and the Start&Stop disabled.

Automatic starting

When, as a result of the action of the user or for operating requirements, the Stop&Start strategy determines that automatic starting must take place, the engine is started according to the following logic without the user having to use the key:
- The relay R1 is closed by the NCM: the relay R2 had already been closed at the end of the key starting procedure, so the starter power supply is operated.
- Once the engine has started, the NCM controls the opening of R1 then performs its diagnosis again: depending on the outcome of this diagnosis, the following conditions may occur: a) R1 is diagnosed as being open, as controlled: the Start&Stop functionality is enabled b) R1 is "stuck": relay R2 is opened and the Start&Stop functionality is disabled.